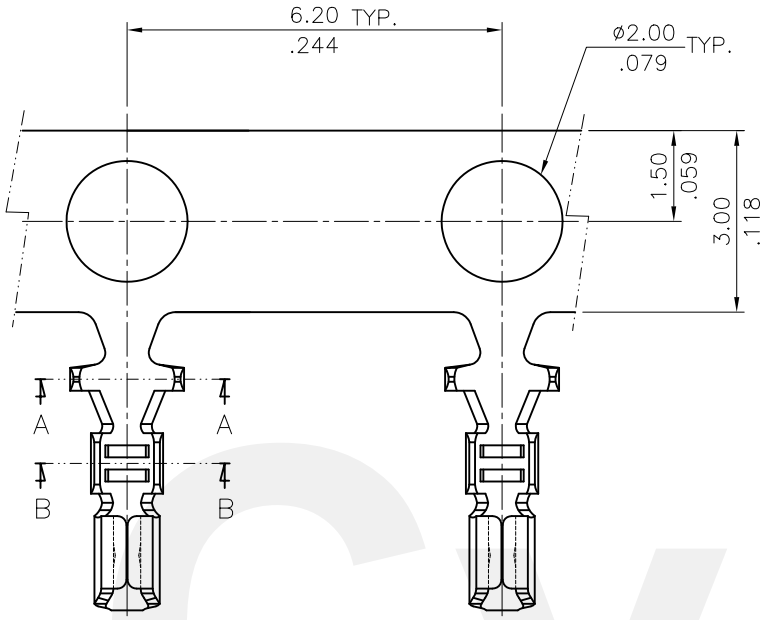

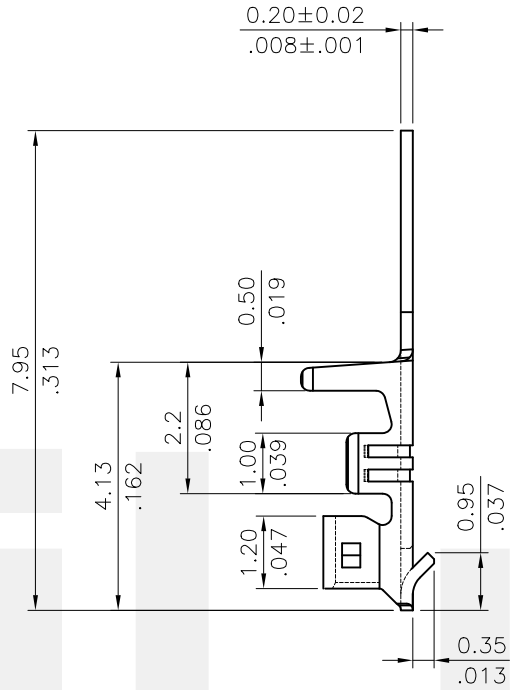

Wire Range	Insulation Diameter	Reel Q'ty
AWG #26~#32	1.10 (.043) MAX.	10,000 PCS.

Ordering Code:

CI15 T01 1 P E 0
① ② ③ ④ ⑤ ⑥

① Series No.
② Type: T01= AWG #26~ #32
△1 ③ Plating: 1= 30μ" Min. Tin Plated (Reflow Plated)
④ Material: P= Phosphor Bronze
⑤ Plating method: E= Pre-tinned
⑥ Option: 0= Standard

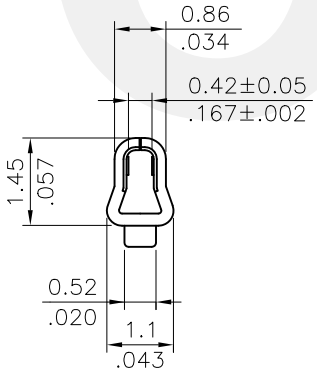

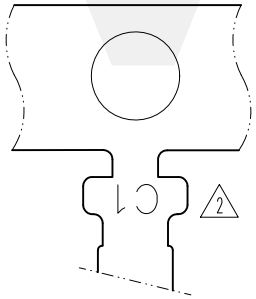

BACK VIEW

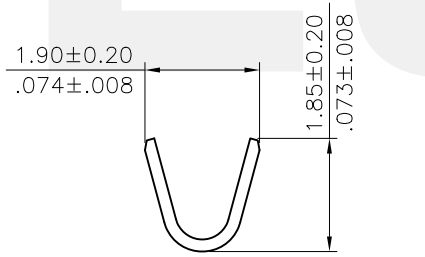

SEC.:A-A

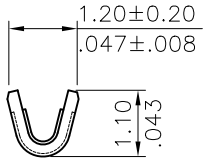

SEC.:B-B

RoHS Compliant

SYM	NAME	DATE	REVISIONS
△4			
△3	Ellie	1/9-15'	ECNT115004
△2	Erin	5/7-12'	ECR12021-0/ECN12074-0
△1	Sun	4/11-07'	ECN07056-0/ECN07133

CVILUX CORP 2015.01.16 ISSUED

		DATE
DRAWN BY:	Ellie	1/9-15'
ENGINEER:	Sun	1/9-15'
CHECKED BY:	Eisley	1/9-15'
APPROVED BY:	David	1/9-15'

UNIT: mm / inch

TOLERANCE UNLESS OTHERWISE SPECIFIED

.X ± 0.20/.008	X.° ± 1°
.XX ± 0.10/.004	.X° ±
.XXX ± 0.05/.002	.XX° ±

TITLE: FOR CI15 Serirs terminal

MATERIAL:

FINISH:

瀚荃股份有限公司
CviLux Corporation

DRAWING NO.	CI1511SD	PART NO.	CI15T011PE0
SCALE	8 / 1	SHEET 1 OF 1	

CviLux